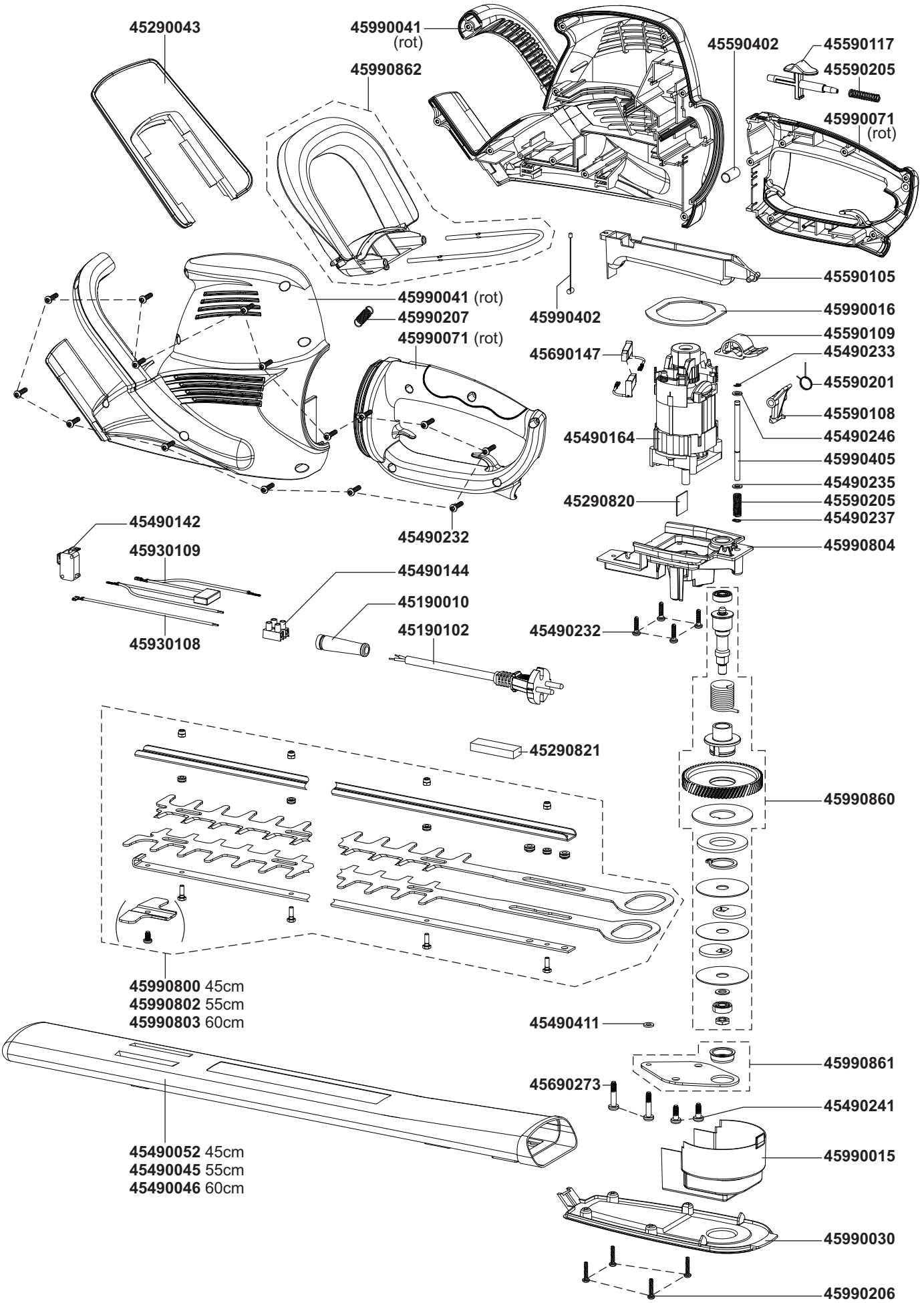HTN 45/55/60 D (M)