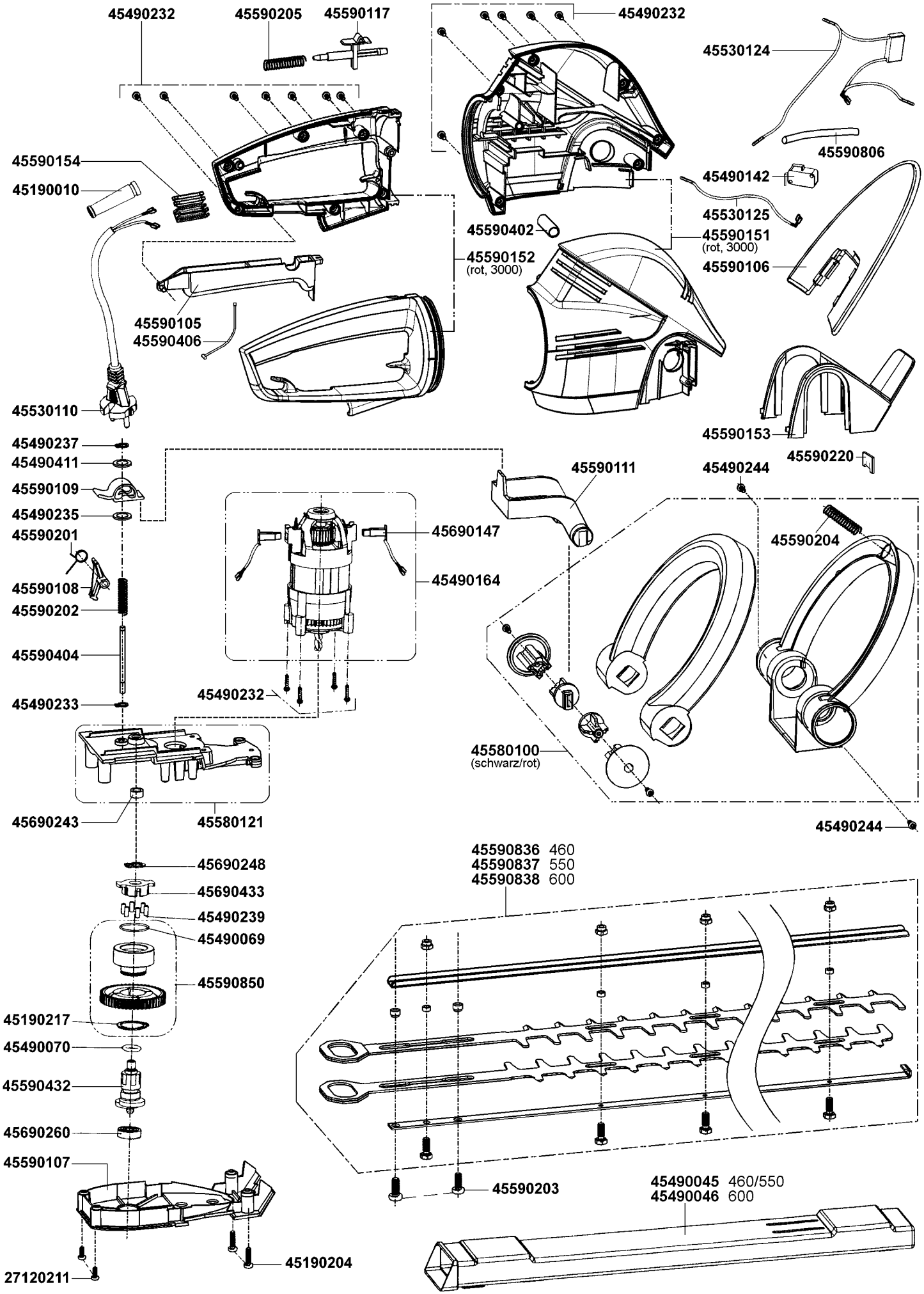HSDN 460/550/600